(Ra 3,2)

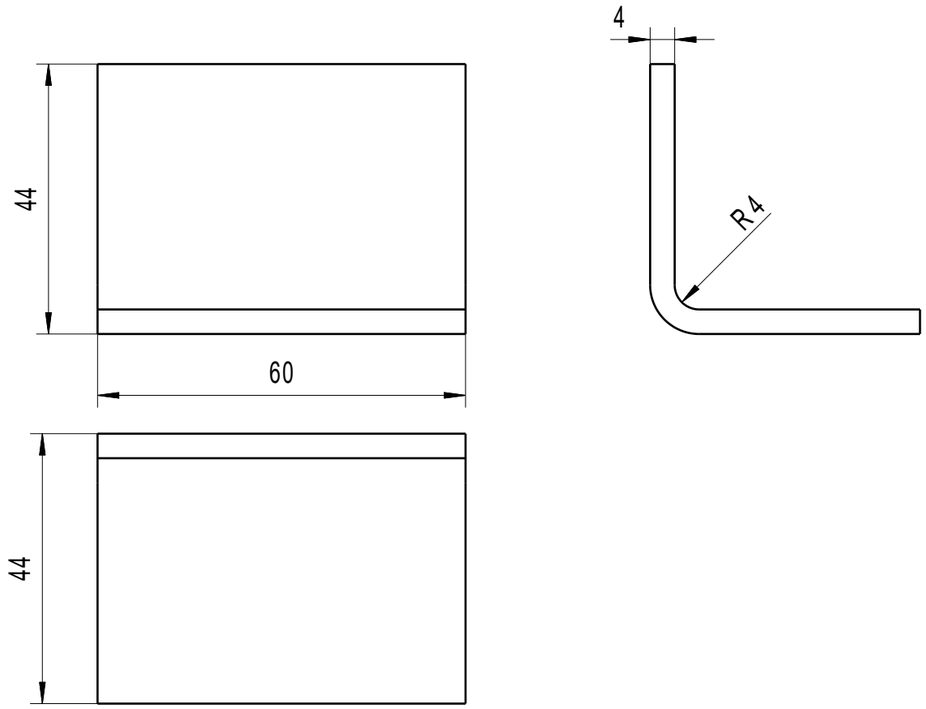

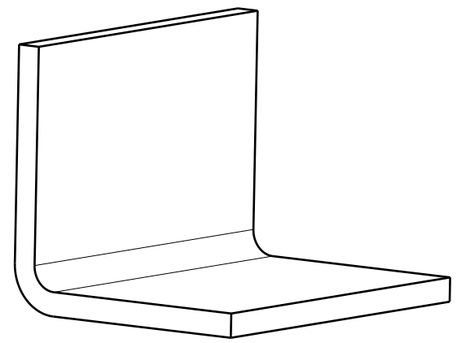

SHEET METAL FOLD

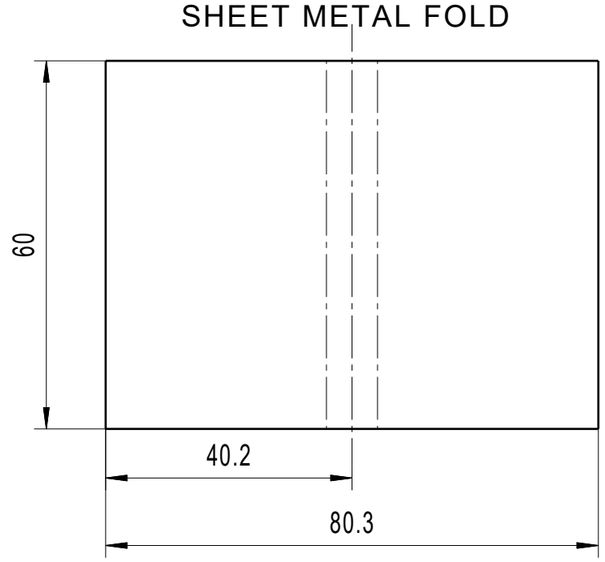

Rev Lev	ECO-No:	ECR-No:	Revision Text:	ECR lifecycle stage:	ECO lifecycle stage:	Date of approval:
-	-	-	-	-	-	-
-	-	-	-	-	-	-
-	-	-	-	-	-	-

Part Rankings	Sheet Scale		Name	Date	Signature
		Prepared	Dominik Kišić	14/06/2023	
	1:1	Checked			
		Approved			

Notes:

RIMAC TECHNOLOGY

Rimac Technology d.o.o.
Ljubljanska 7, Brezje
10431 Sveta Nedelja, Croatia

Drawing Title: L PROFILE	Drawing Number: 000216844	Revision Level: 1.1
Part Title: L PROFILE	Part Number: 003782019	Revision Level: 1.1
Material: EN AW-5754-H22	Mass: 52	

Finish treatment:

Unit of measure:

Semi-finished: Actual SEE BOM **g** Calculated SEE BOM

Effectivity Class		
Development	Prototype	Production
-	-	-

Reference

Format Paper: A3

Projection ISO 128-30

Sheet **1 / 1**

Confidential and property of Rimac Technology.
Disclosure of any confidential/property/information contained in this document/material without the written approval from Rimac Technology is strictly prohibited.

Copyright 2022 Rimac Technology. All rights reserved. Any unauthorized use or copying is strictly prohibited.

CAD-System & Version 3DExperience 2017X

Edge finish

+0.25 0 / 0 -0.3

Table of Significant (SC) Critical (CC) Characteristic		Qty.
⬡	Significant characteristic to be monitored per Control Plan. (SC)	00
▽	Critical characteristic to be monitored per Control Plan. (CC)	00

TOLERANCE CLASS ISO 2768			
T1		T2	
f		H	
m	X	K	X
c		L	
v			