(√ Ra 3,2)

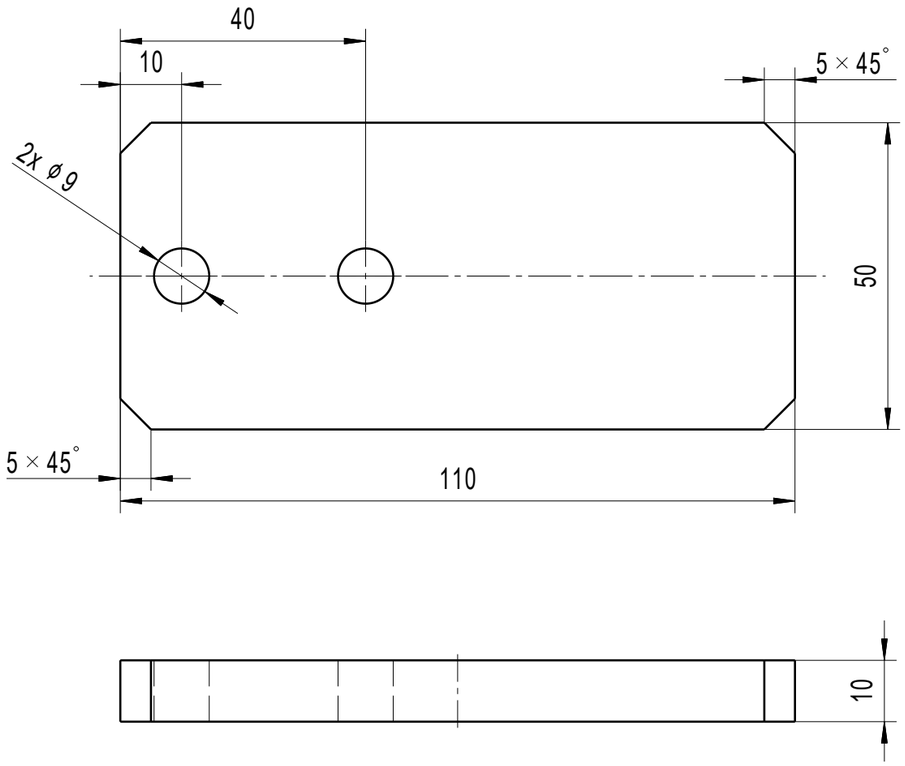

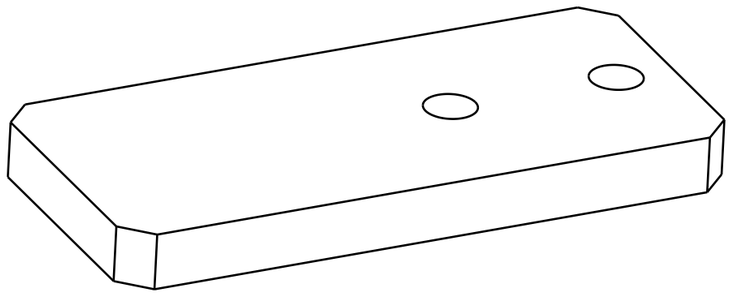

-	-	-	-	-	-	-
-	-	-	-	-	-	-
-	-	-	-	-	-	-
Rev Lev	ECO-No:	ECR-No:	Revision Text:	ECR lifecycle stage:	ECO lifecycle stage:	Date of approval:

Part Rankings	Sheet Scale		Name	Date	Signature
		Prepared	Dominik Kišić	29/06/2023	
	1:1	Checked			
		Approved			

RIMAC TECHNOLOGY

Rimac Technology d.o.o.
Ljubljanska 7, Brezje
10431 Sveta Nedelja, Croatia

Notes:

Drawing Title: PLATE FOR CIRCLE	Drawing Number: 000221858	Revision Level: 1.1
Part Title: PLATE FOR CIRCLE	Part Number: 003343576	Revision Level: 1.1
Material: S235JR	Mass: 415	

Finish treatment:	Unit of measure:			Effectivity Class		
				Development	Prototype	Production
Semi-finished:	Actual SEE BOM	g	Calculated SEE BOM	-	-	-

Reference		Format Paper: A3
Projection ISO 128-30		Sheet 1 / 2

Confidential and property of Rimac Technology.
Disclosure of any confidential/property/information contained in this document/material without the written approval from Rimac Technology is strictly prohibited.

Copyright 2022 Rimac Technology. All rights reserved. Any unauthorized use or copying is strictly prohibited.

CAD-System & Version 3DExperience 2017X

Edge finish	Table of Significant (SC) Critical (CC) Characteristic	Qty.
+0.25 / 0 ; 0 / -0.3	Significant characteristic to be monitored per Control Plan. (SC)	00
	Critical characteristic to be monitored per Control Plan. (CC)	00

TOLERANCE CLASS ISO 2768			
T1		T2	
f		H	
m	X	K	X
c		L	
v			