( Ra 3,2 )

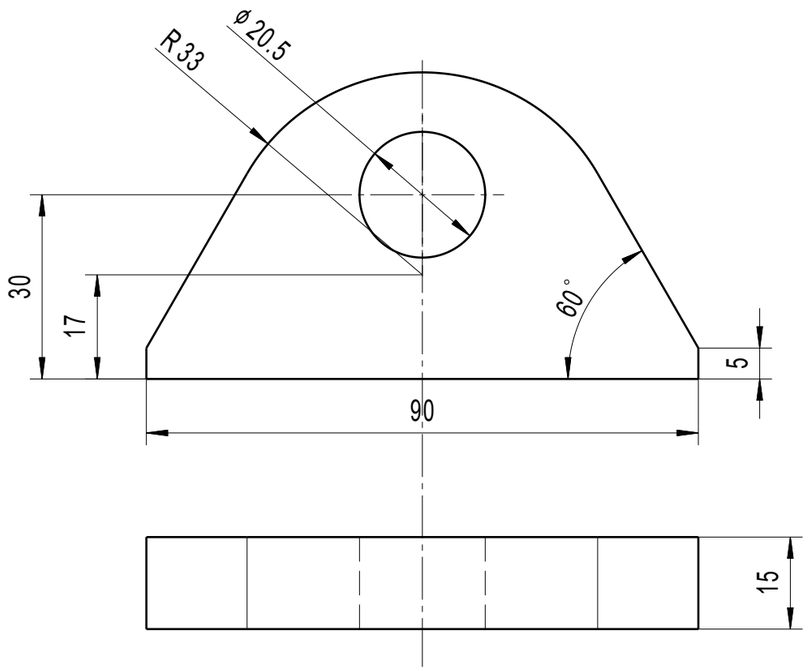


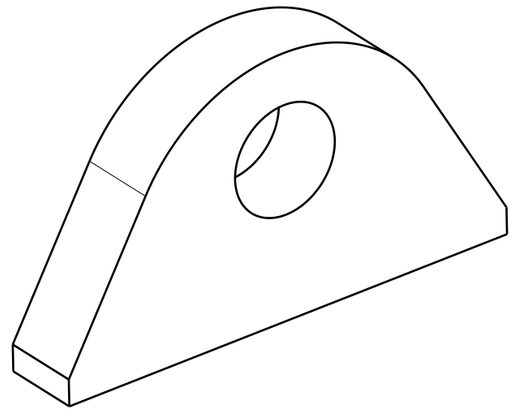

| | | | | | | |
|---|---|---|---|---|---|---|
| - | - | - | - | - | - | - |
| - | - | - | - | - | - | - |
| - | - | - | - | - | - | - |
| Rev Lev | ECO-No: | ECR-No: | Revision Text: | ECR lifecycle stage: | ECO lifecycle stage: | Date of approval: |

| | | | | | |
|---|---|---|---|---|---|
| Part Rankings | Sheet Scale | | Name | Date | Signature |
| | 1:1 | Prepared | Dominik Kišić | 10/06/2023 | |
| | | Checked | | | |
| | | Approved | | | |

RIMAC TECHNOLOGY

Rimac Technology d.o.o.
Ljubljanska 7, Brezje
10431 Sveta Nedelja, Croatia

Notes:

| | | |
|---|---|---|
| Drawing Title: WELDED PART FOR U SLIDER | Drawing Number: 000203832 | Revision Level: 1.1 |
| Part Title: WELDED PART FOR U SLIDER | Part Number: 003598204 | Revision Level: 1.1 |
| Material: S235JR | Mass: 338 | |

| | | | |
|---|---|---|---|
| Finish treatment: | Unit of measure: Actual SEE BOM **g** Calculated SEE BOM | Effectivity Class | |
| | | Development | Prototype | Production |
| Semi-finished: | | - | - | - |

| | | |
|---|---|---|
| Reference | | Format Paper: A3 |
| Projection ISO 128-30 | | Sheet **2 / 2** |

Confidential and property of Rimac Technology.
Disclosure of any confidential/property/information contained in this document/material without the written approval from Rimac Technology is strictly prohibited.

Copyright 2022 Rimac Technology. All rights reserved. Any unauthorized use or copying is strictly prohibited.

CAD-System & Version 3DExperience 2017X

Edge finish

+0.25 0 / 0 -0.3

| | | |
|---|---|---|
| Table of Significant (SC) Critical (CC) Characteristic | | Qty. |
| ⬡ | Significant characteristic to be monitored per Control Plan. (SC) | 00 |
| ▽ | Critical characteristic to be monitored per Control Plan. (CC) | 00 |

| TOLERANCE CLASS ISO 2768 | | | |
|---|---|---|---|
| T1 | | T2 | |
| f | | H | |
| m | X | K | X |
| c | | L | |
| v | | | |